Feb.1.2026 Copyright 2026 HIROSE ELECTRIC CO., LTD. All Rights Reserved.
In case of consideration for using Automotive equipment / device which demand high reliability, kindly contact our sales window correspondents.

RoHS, ELV CONPLIANT

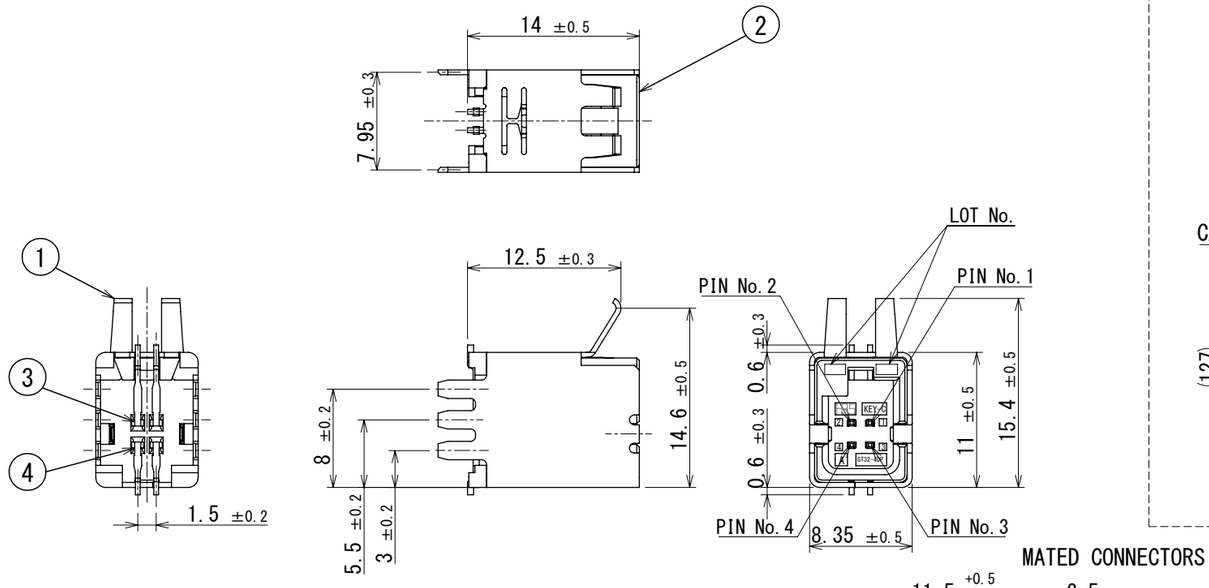

Fig. ADDED A PICK & PLACE TAPE

MATED CONNECTORS

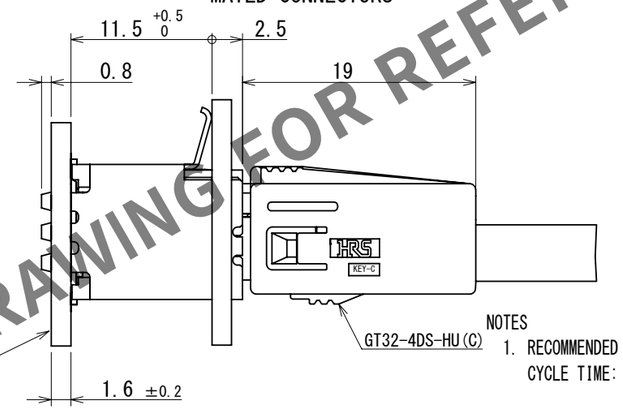

PACKING STYLE

5 TRAYS STACKING.
STACK TRAY A(168146-4) AND TRAY B(168176-0) STAGGERED.
TOP TRAY IS EMPTY.

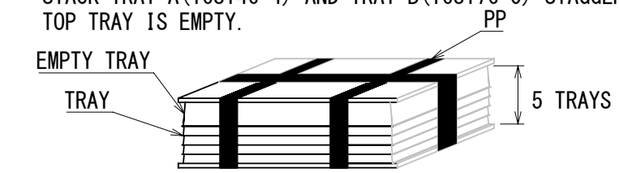

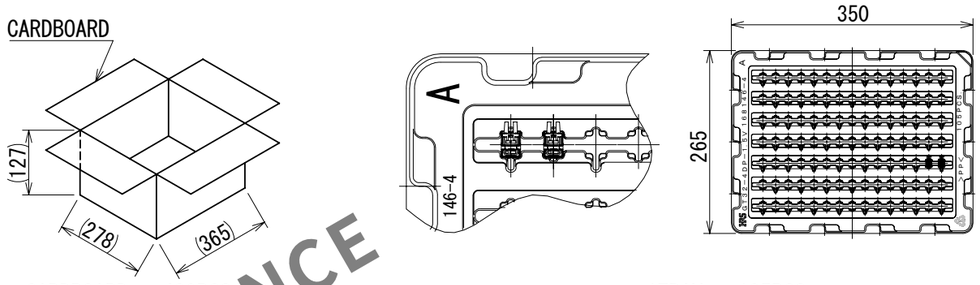

CARDBOARD : 420PCS

1TRAY : 105PCS

HRS DRAWING FOR REFERENCE

RECOMMENDED PCB LAYOUT
(4:1)

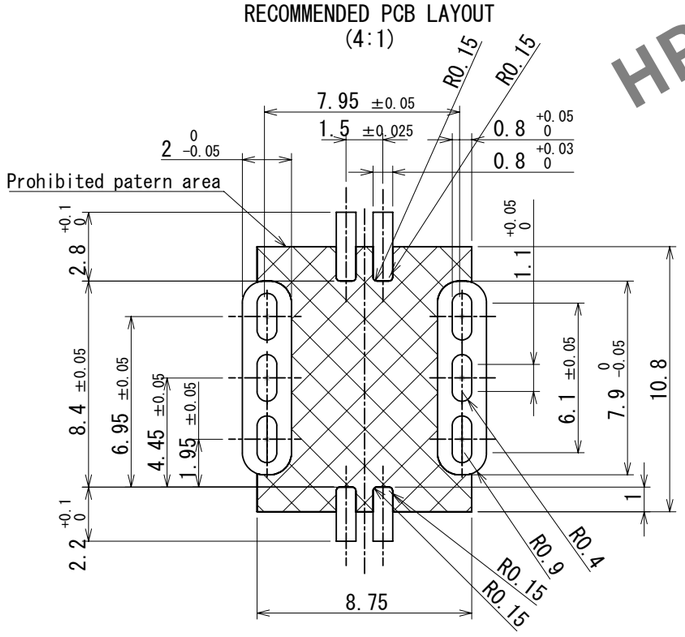

RECOMMENDED PANEL CUTOUT

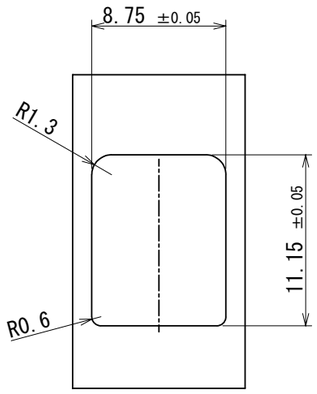

NOTES

1. RECOMMENDED REFLOW PROFILE (SEE RIGHT GRAPH)
   CYCLE TIME: UP TO 2 CYCLES OF REFLOW SOLDERING ARE POSSIBLE UNDER THE CONDITIONS, PROVIDED THAT THERE IS A RETURN TO NOMAL TEMPERATURE BETWEEN THE FIRST AND SECOND CYCLE.
   PEAK TEMPERATURE: 250℃
   230℃ MIN, FOR 20 TO 40 SECONDS.
   PREHEATING AREA 150～180℃ FOR 60 TO 120 SECONDS.
2. HAND SOLDERING: 280～300℃, 2SECONDS MAX.
3. CONTACT COPLANARITY: 0.1mm MAX.
4. RECOMMENDED THICKNESS OF PCB: 1.6mm
5. RECOMMENDED THICKNESS OF SOLDERING PASTE: 0.12mm

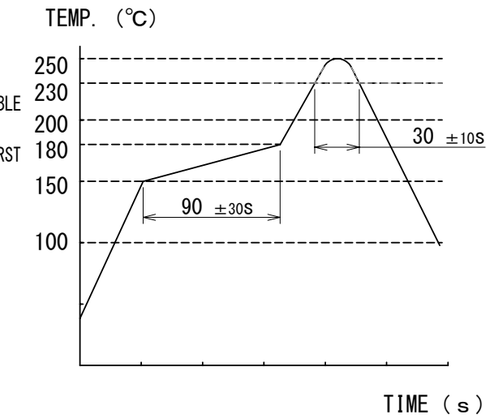

NO.	MATERIAL	FINISH , REMARKS	NO.	MATERIAL	FINISH , REMARKS
3	BRASS	TIN PLATING			
2	PA	BLUE	5	POLYIMIDE	PICK & PLACE TAPE
1	COPPER ALLOY	TIN PLATING	4	BRASS	TIN PLATING

UNITS	SCALE	COUNT	DESCRIPTION OF REVISIONS	DESIGNED	CHECKED	DATE
mm	2:1	0	DIS-T-00018480	KN. YANAGIMOTO	EJ. WAKATSUKI	2023. 07. 03

HIROSE ELECTRIC CO., LTD.

APPROVED :	AR. SHIRAI	2017. 07. 19
CHECKED :	TH. MIZUGUCHI	2017. 07. 19
DESIGNED :	TS. KUBOTA	2017. 07. 19
DRAWN :	TS. KUBOTA	2017. 07. 19

DRAWING NO. EDC-362125-00-00
PART NO. GT32-4DP-1.5V(C)
CODE NO. CL0782-0067-0-00